DTX/2 & DTX/4

2- or 4-Channel Digital Encoder

Technical and Maintenance Manual

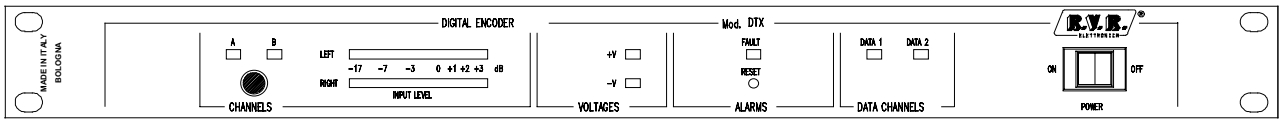

Manufactured by R.V.R. ELETTRONICA **ITALY**

CONTENTS

1. PRELIMINARY INSTRUCTIONS 4

2. GUARANTEE 5

3. FIRST AID 6

3.1. Treating electric shocks 6
3.1.1 If the casualty has lost consciousness 6
3.1.2 If the casualty is conscious 7

3.2. Treating electrical burns 7
3.2.1 Extensive burns and cuts 7
3.2.2 Minor burns 7

4. THE DTX – DRX SYSTEM 8

4.1. Range of applications 8

4.2. External features 9

4.3. Technical specifications 10
4.3.1 System 10
4.3.2 General 10
4.3.3 RF system minimum specifications 10

5. OVERVIEW 11

5.1. Description of the device 11
5.1.1 Front panel 11
5.1.2 Indicator lights 11
5.1.3 Rear panel 12
5.1.4 Audio Input Card 12
5.1.5 Main Card 13

6. SETTINGS 14

6.1. Power supply voltage 14

6.2. Audio Input Card 14
6.2.1 Position 14
6.2.2 Audio input impedance 14
6.2.3 Audio input level 14
6.2.4 Preemphasis 15
6.2.5 Audio channel pair selection 15
6.2.6 Auxiliary data channel enabling 15

6.3. Main card 16
6.3.1 EPROM program selection 16
6.3.2 I/O connector 16
6.3.3 Encoded digital signal output levels 16
6.3.4 RS232 interface 16

6.4. Panel Card 17
6.4.1 Display settings 17

7. INSTALLATION 18
7.1. FM Transmitter 18
7.1.1 Baseband input 18
7.1.2 Peak deviation 18
8. CONNECTIONS 19
8.1. Audio input connector 19
8.2. Encoded digital signal outputs 19
8.3. Telemetry interface 19
8.4. RS232 Interface 20
9. OPERATION 21
9.1. Normal operation 21
9.2. Reset circuit 21
10. SUMMARY OF TABLES 22
10.1.1 Front panel 22
10.1.2 Front panel – Indicator lights 22
10.1.3 Rear panel 22
10.1.4 Audio Input Card – Audio input impedance selection 23
10.1.5 Audio Input Card – Preemphasis selection 23
10.1.6 Audio Input Card – Audio channel pair selection 23
10.1.7 Audio Input Card – Auxiliary data channel enabling 23
10.1.8 Main card – EPROM program selection 23
10.1.9 Main card – I/O connector setting 23
10.1.10 Main card – RS232 Interface setting 24
10.1.11 Panel card – Display settings 24
10.1.12 FM Transmitter – Peak deviation setting 24
10.1.13 Audio input connections 24
10.1.14 Telemetry interface connections 24
10.1.15 RS232 Interface connections 25
11. DIAGRAMS AND LAYOUTS 26

1. PRELIMINARY INSTRUCTIONS

This manual is a general guide for trained, qualified personnel, aware of the hazards involved in working with electrical and electronic circuits.

It does not contain a full description of all safety precautions to be observed by personnel using this or other devices.

The installation, functioning, maintenance and use of this device involve risks for both the personnel and the device itself, which must be operated only by qualified personnel.

R.V.R. Elettronica declines all responsibility for injury or damage resulting from improper or incorrect use of the device by any personnel.

Always observe works and fire prevention regulations during installation and use.

This device has been tested and lies within the limits established for Class A electronic devices, as at art.15 of the provisions of the Federal Communications Commission. Said limits are designed to guarantee a reasonable level of protection against interference when the device is used in a commercial area.

This device generates, uses and may radiate radio frequency energy: it may interfere with radio and television communications unless installed and used in accordance with the directions in the present manual.

Use of this device in a residential area may cause interference, in which case the user may be asked, at his/her own expense, to adopt the most suitable measures for reducing said interference.

CAUTION: always disconnect the power supply before opening the covers or removing any part of the device. Use appropriate grounding to discharge the capacitors and high voltage points before any maintenance operations.

R.V.R. Elettronica reserves the right to modify the design and technical specifications of the device and the content of the present manual without prior notice.

2. GUARANTEE

The 12 (twelve) month guarantee covers all R.V.R. Elettronica products.
The manufacturer's guarantee covers products such as valves for terminals.
R.V.R. Elettronica also extends all transferable manufacturing guarantees. These shall be held by R.V.R. Elettronica to guarantee the fastest, most precise assistance possible; complaints must be made directly to R.V.R. Elettronica in accordance with established procedures.

The guarantee does not cover:

- damage caused during shipment of the machine to R.V.R. for repairs;
- any unauthorized modification or repair;
- incidental damage not due to faults in the device;
- non-incidental nominal damage;
- costs for shipment and insurance of the device and for substituting parts or units.

Any damage to the device caused during transportation must be brought to the attention of the haulier and recorded on the delivery receipt. R.V.R. Elettronica must be informed of any difference or damage discovered after delivery within 5 (five) days of delivery.

Using the guarantee:

1. Contact the dealer or distributor from which the device was purchased. Describe the problem or fault to check whether there is a simple solution. Dealers and Distributors can supply information about the most common problems; they can normally repair the device much more quickly than the manufacturer.
2. If your dealer is unable to help, contact R.V.R. Elettronica and explain the problem; if necessary, you will receive authorization to send the device, together with the necessary instructions.
3. When you receive said authorization, return the device carriage-free to the address indicated. Package the device carefully, if possible using the original packaging, and seal it in a parcel. **Do not return the device unless you have receive authorization to do so, or it may be returned to the sender.**
4. Quote the device type, model and serial number; attach a written technical diagnosis listing all problems and faults encountered and a copy of the purchase invoice.

Substitution of parts under guarantee or spare parts can be requested at the following address:

R.V.R. Elettronica
via del Fonditore, 2/2c
40138 BOLOGNA – ITALY
Tel.: +39 051 6010506
Fax: +39 051 6011104

Always indicate the type, model and serial number of the device.

3. FIRST AID

Personnel who install, use or maintain the device must have a basic knowledge of first aid.

3.1. Treating electric shocks

3.1.1 If the casualty has lost consciousness

- Lie the casualty on his/her back on a firm surface.
- Clear the airway by lifting the neck and pushing the forehead back (Figure 1). If necessary, open the mouth and check that the casualty is breathing.

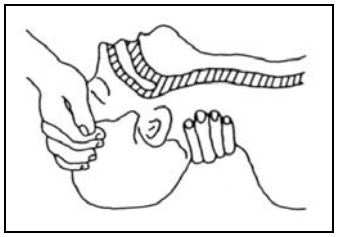

Figure 1

- If the casualty is not breathing, start artificial respiration immediately (Figure 2): tilt the head back, pinch the nostrils, place your mouth over the casualty's and breathe out quickly 4 times.

Figure 2

- Check the casualty's pulse (Figure 3); if there is no pulse, begin heart massage immediately (Figure 4), compressing the sternum near the centre of the chest (Figure 5).

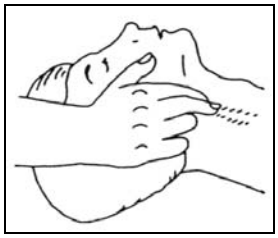

Figure 3

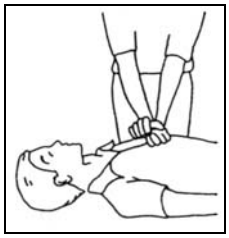

Figure 4

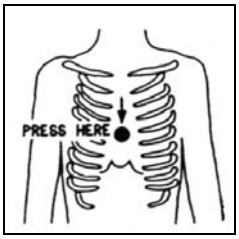

Figure 5

If there is only one first-aider, alternate 15 compressions with 2 breaths.

If there are two first-aiders, alternate one breath for every 5 compressions. Do not stop the heart massage during artificial respiration.

Call a doctor as soon as possible.

3.1.2 If the casualty is conscious

- Cover the casualty with a blanket.
- Reassure the casualty.
- Loosen the casualty's clothing and lie him/her in a comfortable position.

3.2. Treating electrical burns

3.2.1 Extensive burns and cuts

- Cover the area affected with a clean sheet or cloth.
- Do not burst blisters; remove the cloth and any clothing stuck to the skin; apply a suitable cream.
- Treat the casualty for the type of injury sustained.
- Take the casualty to hospital as soon as possible.
- If arms and legs are affected, keep them in a raised position.

If medical assistance is not available within one hour and the casualty is conscious and not nauseous, administer a solution consisting of one teaspoon of salt and half a teaspoon of bicarbonate of soda per 250 ml water.

Have the casualty slowly drink around half a cup of the solution four times for a period of 15 minutes.

Stop administering the solution at the first signs of retching.

Do not administer alcohol.

3.2.2 Minor burns

- Apply cold (but not freezing) gauze compresses using a clean cloth.
- Do not burst blisters; remove any clothing stuck to the skin; apply a suitable cream.
- If necessary, help the casualty into clean, dry clothes.
- Treat the casualty for the type of injury sustained.
- Take the casualty to hospital as soon as possible.
- If arms and legs are affected, keep them in a raised position.

4. THE DTX – DRX SYSTEM

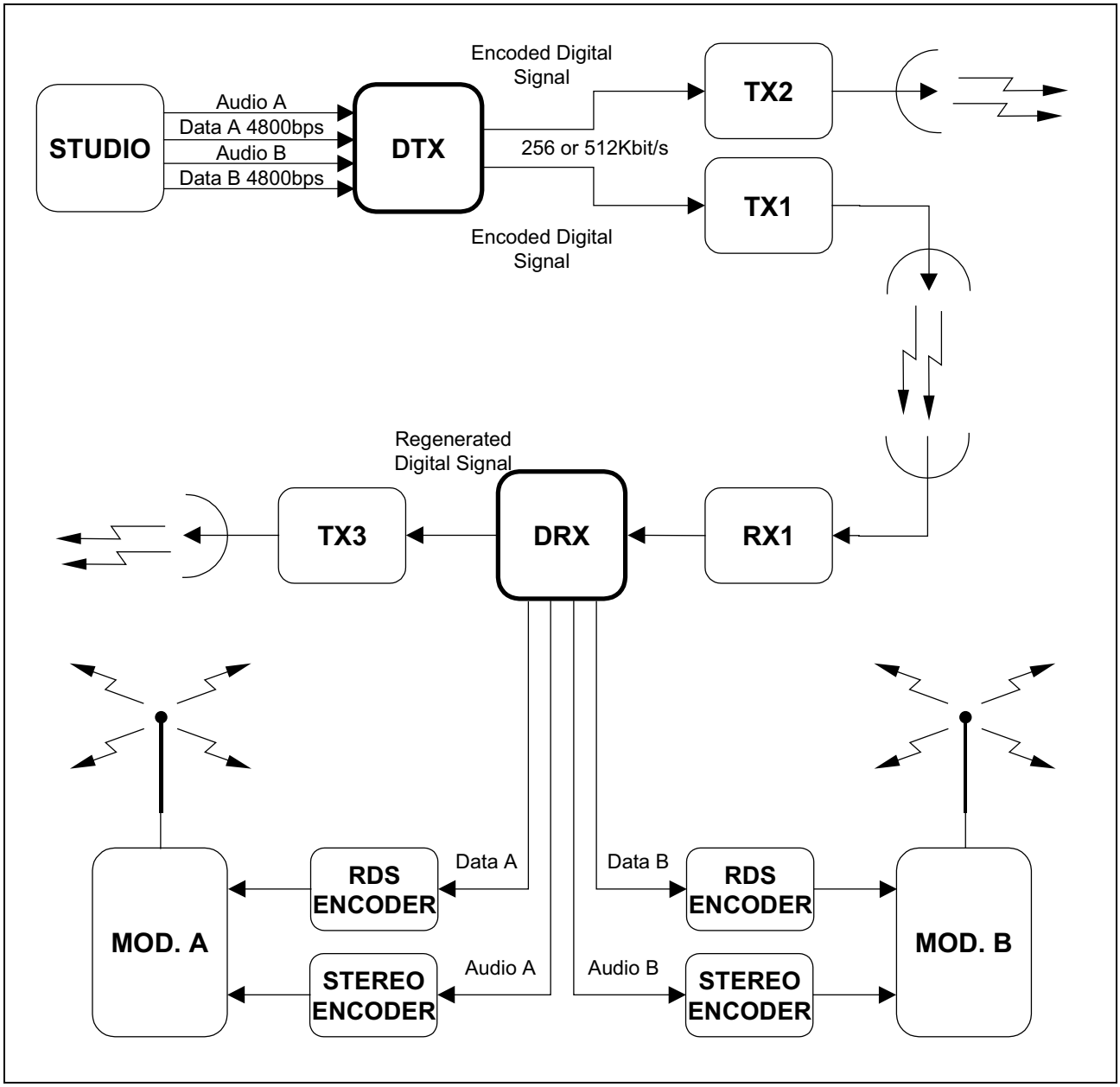

Figure 6

4.1. Range of applications

The DTX is part of a digital encoding and decoding system designed to enhance the performance of conventional analogue radio links, in order to obtain audio quality comparable to that of CDs in extreme reception conditions.

The main features of digital technology, such as cleaner sound and greater immunity to interference, are the mainstays of the encoder–decoder system designed and manufactured by R.V.R. Elettronica: with a S/N ratio of just 30 dB on the demodulated baseband signal, or with a signal level at the antenna up to 20 dB lower than the operating threshold just acceptable for an analogue transfer, the DTX – DRX pair continues to provide top performance. This system will finally allow multiple connections in a daisy-chain fashion without any degradation of the signal between relay stations.

In addition to the above-mentioned advantages, the system is compatible with most existing analogue radio links on the market and is highly versatile, so that it is easily adapted to specific user requirements.

4.2. External features

The DTX is housed in a 19" rack.

On the front panel are the power On/Off switch and the reset pushbutton.

The indicator lights include two LED bars for measurement of the level of the right-hand and left-hand audio signals, the lights which indicate the presence of the +15 V and –15 V direct current voltages, reset circuit intervention and the passage of auxiliary data through the RS232 interfaces.

On the 4-channel version, the selector switch for the pair of channels whose activity levels are to be indicated by the relative LEDs is also enabled.

On the rear panel there is the socket with switch for selection of the alternating current voltage, sockets for the 24 VDC power supply, DB9 female connector for the auxiliary data channel, a DB9 male connector for the telemetry system, two fully independent BNC outputs for the baseband digital signal and two XLR female connectors for the input of the two audio channels.

On the 4-channel version, the rear panel has an additional DB9 female connector for auxiliary data and another pair of XLR female connectors for the other two audio inputs.

4.3. Technical specifications

4.3.1 System

- Audiofrequency response: 2 [4] channels, 20 Hz – 15 kHz, ±0.7 dB
- Preemphasis (for DTX)/Deemphasis (for DRX): 50 μs applied internally
- Data: 1 [2] RS-232 channels, max. 8000 baud
- Sampling rate: 32 kHz
- Source encoding: ADPCM Sub-band (Adaptive Differential Pulse Code Modulation)
- Channel encoding: PAM (Pulse Amplitude Modulation) 2 levels, partial response
- Bit rate: 256 Kbit/s [512 Kbit/s]
- Total delay: <5 ms
- Dynamic range >90 dB
- Total harmonic distortion @ 1 kHz: <0.05%
- Audio band Signal/Noise ratio >75 dB

4.3.2 General

- Audio input/output connectors: XLR (female for DTX, male for DRX)
- Audio input impedance (for DTX): 600 Ω/10 KΩ balanced/unbalanced
- Audio output impedance (for DRX): 100 Ω balanced/unbalanced
- Encoded signal input/output connector: BNC
- Encoded signal input impedance (for DRX): 470 KΩ
- Encoded signal output impedance: 100 Ω
- Auxiliary data input/output connector: DB9 (female for DTX, male for DRX)
- Power supply: 100-120-220-240V, 50-60 Hz, single-phase
- Consumption: approx. 15 W
- Panel dimensions: 483 mm (19”) L x 42.5 mm (1.7”) H
- Depth: 371.5 mm (14.6”)
- Weight: 7 kg
- Operating temperature: 0 °C – 50 °C

4.3.3 RF system minimum specifications

- Peak deviation: 53 kHz [38 kHz]
- Passband: 200 kHz [350 kHz]
- S/N: >30 dB

5. OVERVIEW

5.1. Description of the device

5.1.1 Front panel

Figure 7 shows the front panel of the DTX/2 and DTX/4.

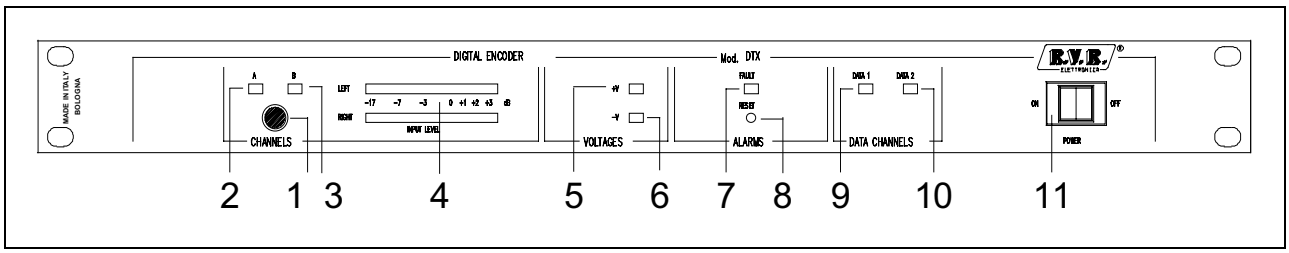

Figure 7

Ref. in Figure 7	Label	Function
1	CHANNELS	Audio input level selector switch (*)
4	INPUT LEVEL	Input level measurement
8	RESET	Reset pushbutton
11	POWER	Power On/Off switch

Table 1

(*) Not enabled on the DTX/2.

5.1.2 Indicator lights

Table 2 summarizes the meaning of the LEDs.

Ref. in Figure 7	Label	Colour	Meaning
2	A	Green	Channel A level measurement (*)
3	B	Green	Channel B level measurement (*)
5	+V	Green	Presence of positive power
6	–V	Green	Presence of negative power
7	FAULT	Red	Reset circuit triggered
9	DATA 1	Green	Channel A passage of aux. data
10	DATA 2	Green	Channel B passage of aux. data (**)

Table 2

(*) Have no meaning on the DTX/2; (**) not enabled on the DTX/2.

5.1.3 Rear panel

Figure 8 shows the rear panel of the DTX/2 and the DTX/4.

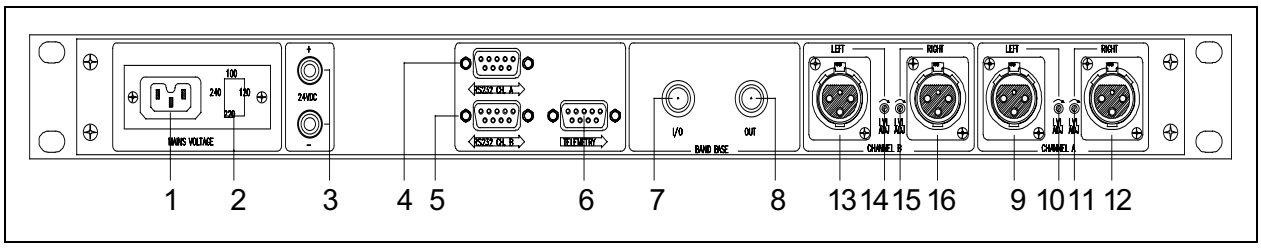

Figure 8

Ref. in Figure 8	Label	Function	Direction
1	MAIN VOLTAGE	Power supply unit	Input
2	–	Power supply voltage selector switch	–
3	24VDC	24 V_{DC} power sockets	Input
4	RS232 CH. A	Channel A auxiliary data	Input
5	RS232 CH. B	Channel B auxiliary data (*)	Input
6	TELEMETRY	Telemetry connector	Input/Output
7	I/O	Encoded digital signal	Output
8	OUT	Encoded digital signal	Output
9, 12	CHANNEL A	Audio channel A	Input
10, 11	ADJ LVL	Channel A audio level adjustment	–
13, 16	CHANNEL B	Audio channel B (*)	Input
14, 15	ADJ LVL	Channel B audio level adjustment (*)	–

Table 3

(*) Not present on the DTX/2.

5.1.4 Audio Input Card

The analogue input section has a differential configuration with high CMRR and uses high quality, low noise components and integrated circuits.

The reliable and precise analogue/digital conversion uses a 32 kHz sampling rate, with 16 bit PCM format data.

The audio data is compressed by the APTX100ED, one of the most famous and widely used DSPs in this field, which uses ADPCM encoding, allowing a factor 4 reduction in the clock frequency.

The DSP also executes multiplexing between compressed audio data and auxiliary data when selected.

5.1.5 Main Card

All of the main functions are controlled by a programmable digital logic, guaranteeing reliability and great versatility.

This integrated circuit controls:

- generation of all timers necessary for the various devices;
- acquisition of data from the RS232 serial ports;
- processing of multiplexed data from the DSPs;
- generation of commands for synthesis of the encoded digital signal.

6. SETTINGS

The following sections indicate the logical sequence of operations to be effected on the DTX in order to set the various operating parameters.

6.1. Power supply voltage

Remove the fuse holder from the power supply unit (2 in Figure 8) with a small screwdriver and replace it with the value of the mains voltage available next to the arrow.

The device factory setting is 220 V.

6.2. Audio Input Card

6.2.1 Position

In a DTX/2 – DRX/2 system, the Audio Input card enabled must be connected to the Main Card by connector JP5 (CH. A)

To convert a DTX/4 to a DTX/2, remove the flat connection between JP6 (CH. B, Main Card) and JP3 (Audio Input Card), and move JP8 (PROGRAM, Main Card) as indicated in Table 8.

6.2.2 Audio input impedance

Jumpers JP1 (L-600H) and JP2 (R-600H) select the input impedance respectively for the Left-hand channel (LEFT, 9 and 13 in Figure 8) and the Right-hand channel (RIGHT, 12 and 16 in Figure 8).

JP6 and JP7	Impedance
pos. 1-2	600 Ω
pos. 2-3	10 KΩ

Table 4

The DTX input impedance factory setting is 600 Ω.

6.2.3 Audio input level

Use trimmers RV1 (R-ADJ, 11 and 15 in Figure 8) and RV2 (L-ADJ, 10 and 14 in Figure 8) to adjust the nominal input levels respectively for the Right-hand and Left-hand channels.

When the amplitude of the audio signal at input reaches the nominal value, the yellow LEDs on the bar should light up, whilst the reading at test points TP1 (RIGHT) and TP6 (LEFT) should be $1V_{RMS}$ (+2.2 dBm or 2.8 V_{PP}). In this way, there is a 3 dB margin before saturation of the Analogue/Digital converter input.

The device nominal unbalanced input factory setting is 0 dBm (775 mV_{RMS} or 2.2 V_{PP}) and a frequency of 400 Hz.

6.2.4 Preemphasis

Jumpers JP6 (L-PRE) and JP7 (R-PRE) apply a preemphasis of 50 μs respectively for the Left-hand (LEFT) and Right-hand (RIGHT) channel.

JP6 and JP7	Preemphasis
pos. 1-2	On
pos. 2-3	Off

Table 5

Other preemphasis values, for example 75 μs, are possible on request.

The DTX factory setting is preemphasis Off.

6.2.5 Audio channel pair selection

Jumper JP4 (CH. A/B) selects the synchronization word used by the APTX100ED during encoding of the pair of audio channels.

JP4	Selected pair
pos. 1-2	A
pos. 2-3	B

Table 6

The printing on the rear panel and the Main Card establishes a hardware connection, without putting any constraints on this selection.

When setting this jumper, remember that:

- in order to transmit and receive correctly, the selection, A or B, must be the same on the DTX Audio Input card and on the DRX Audio Output card from which the pair of channels is to be obtained;
- when using a DTX/4 – DRX/4 system, the two Audio Input cards must be set on different synchronization words to prevent transmission conflicts and reception errors.

6.2.6 Auxiliary data channel enabling

Jumper JP5 enables the transmission of auxiliary data.

JP5	Auxiliary data
pos. 1-2	enabled
pos. 2-3	disabled

Table 7

The DTX factory setting is auxiliary data enabled.

6.3. Main card

6.3.1 EPROM program selection

Jumper JP8 (PROGRAM) selects the device operating mode, by selecting a program stored in the EPROM from a maximum of 16 possible programs.

The program is loaded the next time the device is switched on.

The standard operating modes are shown in Table 8.

JP8	DTX/2	DTX/4
no jumper	2-channel standard	2-channel standard
pos. 1-2	–	4-channel standard

Table 8

Other operating modes, implemented at the customer's request, can be selected with appropriate jumper configurations on JP8.

6.3.2 I/O connector

Jumper JP16 (IN/OUT) selects the direction of the baseband I/O connector (7 in Figure 8).

JP16	Position	Direction
DTX/2 and DTX/4	2-3	Output
DRX/2 and DRX/4	1-2	Input

Table 9

6.3.3 Encoded digital signal output levels

Use trimmers RV1 (OUT LEVEL) and RV2 (I/O LEVEL) to adjust the amplitude of the encoded digital signals respectively at the outputs OUT (8 in Figure 8) and I/O (7 in Figure 8).

The output level factory setting is 2.2 V_{PP}.

6.3.4 RS232 interface

Jumpers JP10 (RX1/TX1) and JP11 (RX2/TX2) select the direction of the serial ports, respectively for the pairs of CHANNEL A (RS232 CH. A, 4 in Figure 8) and CHANNEL B (RS232 CH. B, 5 in Figure 8).

JP10 and JP11	Position	Direction
DTX/2 and DTX/4	2-3	Input
DRX/2 and DRX/4	1-2	Output

Table 10

6.4. Panel Card

6.4.1 Display settings

Jumpers JP2 (R-2/4CH) and JP3 (L-2/4CH) enable the selector push button (1 in Figure 7) respectively for the Right-hand and Left-hand channel.

JP2 and JP3	Position
DTX/2	1-2
DTX/4	2-3

Table 11

7. INSTALLATION

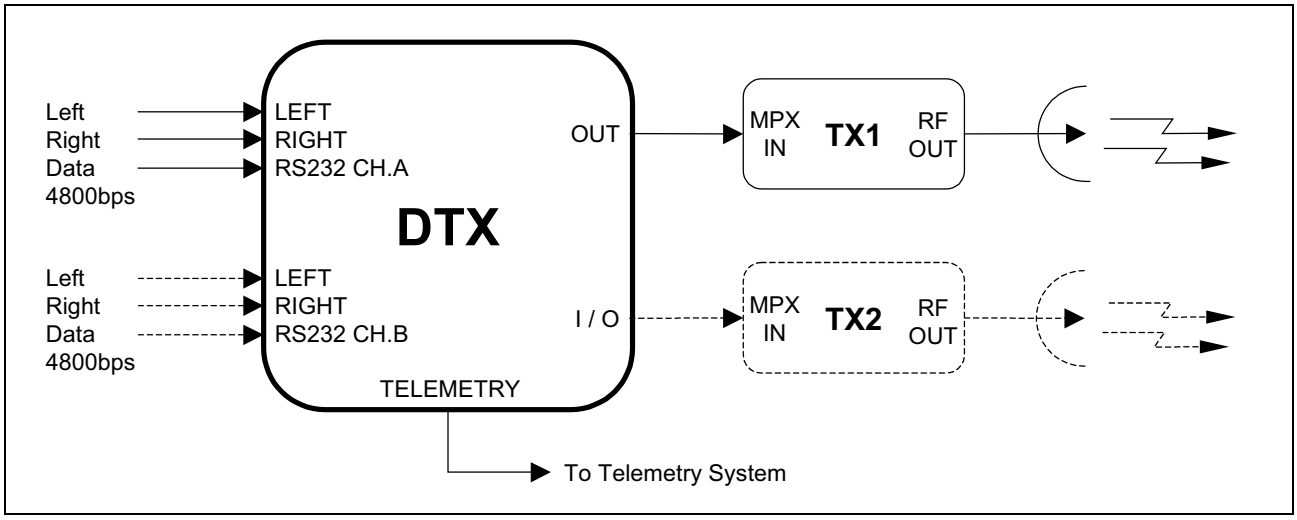

Figure 9

7.1. FM Transmitter

7.1.1 Baseband input

Connect the transmitter MPX input to one of the DTX baseband outputs (I/O or OUT, 7 or 8 in Figure 8).

7.1.2 Peak deviation

Adjust the transmitter according to the system used to obtain the peak deviation indicated in Table 12.

System	Recommended deviation
DTX/2 – DRX/2	±53 kHz
DTX/4 – DRX/4	±38 kHz

Table 12

8. CONNECTIONS

8.1. Audio input connector

The meaning of the signals at the pins, indicated in Table 13, is immediate.

Pin	Balanced	Unbalanced
1	Ground	Ground
2	Positive	Positive
3	Negative	Ground

Table 13

With a balanced audio input, if the connection has network noise, disconnect the screening braid on both the Right-hand and Left-hand input connectors.

If the problem persists, reconnect the screening braid to the input connectors and disconnect it at the other end of the audio cables.

If, after this operation, there is still interference, carefully check the length and arrangement of the audio connection cables.

8.2. Encoded digital signal outputs

The DTX makes available two independent outputs for the encoded digital signal, which can be used for controlling two different transmitters.

The baseband signal must be connected to the transmitter MPX input.

8.3. Telemetry interface

The DB9 connector labelled 6 in Figure 8 (TELEMETRY) is the connector for device telemetry signals.

All signals and commands are in negative logic (low active).

The meaning of the signals at the pins is indicated in Table 14.

Pin	Meaning	Direction
1	External reset	Input
4	FAULT	Output
5	Ground	–
2, 3, 6, 7, 8, 9	Not connected	–

Table 14

8.4. RS232 Interface

The DB9 connectors labelled 4 (RS232 CH. A) and 5 (RS232 CH. B) in Figure 8 are the serial lines for the auxiliary data associated respectively with pair A and B.

The maximum standard bit rate which may be used is 4800 bps.

The meaning of the signals at the pins, indicated in Table 15, is immediate.

Pin	Meaning
2	TXD
3	RXD
5	Ground
6	+5V
1, 4, 7, 8, 9	Not connected

Table 15

9. OPERATION

9.1. Normal operation

When powered up, the circuit automatically loads the desired programmable logic configuration and initializes the Audio Input card DSPs.

At this point the DTX is operative and begins the A/D conversion, data compression and generation of the baseband encoded digital signal.

Even if there is no audio signal at input, there is the passage of bits from the baseband outputs. This is mainly due to the synchronization words which the encoder DSPs send to the decoder DSPs so that the latter can reconstruct the audio signals.

Therefore, when using a DTX/4 – DRX/4 system, select two different synchronization words for the two Audio Input cards (Table 6).

9.2. Reset circuit

The reset command forces machine initialization again and is triggered when the configuration was not loaded correctly, or was partly or totally compromised by external events (overvoltage, discharge of static electricity, etc.).

The device can be reset in three different ways:

1. automatically: by means of an integrated circuit which is triggered if it detects the absence of a control signal which must always be present at its input;
2. manually: by pressing the RESET pushbutton on the front panel (8 in Figure 7) with a sharp object;
3. remotely: with a negative pulse through the telemetry interface.

10. SUMMARY OF TABLES

10.1.1 Front panel

Ref. in Figure 7	Label	Function
1	CHANNELS	Audio input level selector switch (*)
4	INPUT LEVEL	Input level measurement
8	RESET	Reset pushbutton
11	POWER	Power On/Off switch

Table 1

(*) Not enabled on the DTX/2.

10.1.2 Front panel – Indicator lights

Ref. in Figure 7	Label	Colour	Meaning
2	A	Green	Channel A level measurement (*)
3	B	Green	Channel B level measurement (*)
5	+V	Green	Presence of positive power
6	–V	Green	Presence of negative power
7	FAULT	Red	Reset circuit triggered
9	DATA 1	Green	Channel A passage of aux. data
10	DATA 2	Green	Channel B passage of aux. data (**)

Table 2

(*) Have no meaning on the DTX/2; (**) not enabled on the DTX/2.

10.1.3 Rear panel

Ref. in Figure 8	Label	Function	Direction
1	MAIN VOLTAGE	Power supply unit	Input
2	–	Power supply voltage selector switch	–
3	24VDC	24 V_{DC} power sockets	Input
4	RS232 CH. A	Channel A auxiliary data	Input
5	RS232 CH. B	Channel B auxiliary data (*)	Input
6	TELEMETRY	Telemetry connector	Input/Output
7	I/O	Encoded digital signal	Output
8	OUT	Encoded digital signal	Output
9, 12	CHANNEL A	Audio channel A	Input
10, 11	ADJ LVL	Channel A audio level adjustment	–
13, 16	CHANNEL B	Audio channel B (*)	Input
14, 15	ADJ LVL	Channel B audio level adjustment (*)	–

Table 3

(*) Not present on the DTX/2.

10.1.4 Audio Input Card – Audio input impedance selection

JP6 and JP7	Impedance
pos. 1-2	600 Ω
pos. 2-3	10 KΩ

Table 4

10.1.5 Audio Input Card – Preemphasis selection

JP6 and JP7	Preemphasis
pos. 1-2	On
pos. 2-3	Off

Table 5

10.1.6 Audio Input Card – Audio channel pair selection

JP4	Selected pair
pos. 1-2	A
pos. 2-3	B

Table 6

10.1.7 Audio Input Card – Auxiliary data channel enabling

JP5	Auxiliary data
pos. 1-2	enabled
pos. 2-3	disabled

Table 7

10.1.8 Main card – EPROM program selection

JP8	DTX/2	DTX/4
no jumper	2-channel standard	2-channel standard
pos. 1-2	–	4-channel standard

Table 8

10.1.9 Main card – I/O connector setting

JP16	Position	Direction
DTX/2 and DTX/4	2-3	Output
DRX/2 and DRX/4	1-2	Input

Table 9

10.1.10 Main card – RS232 Interface setting

JP10 and JP11	Position	Direction
DTX/2 and DTX/4	2-3	Input
DRX/2 and DRX/4	1-2	Output

Table 10

10.1.11 Panel card – Display settings

JP2 and JP3	Position
DTX/2	1-2
DTX/4	2-3

Table 11

10.1.12 FM Transmitter – Peak deviation setting

System	Recommended deviation
DTX/2 – DRX/2	±53 kHz
DTX/4 – DRX/4	±38 kHz

Table 12

10.1.13 Audio input connections

Pin	Balanced	Unbalanced
1	Ground	Ground
2	Positive	Positive
3	Negative	Ground

Table 13

10.1.14 Telemetry interface connections

Pin	Meaning	Direction
1	External reset	Input
4	FAULT	Output
5	Ground	–
2, 3, 6, 7, 8, 9	Not connected	–

Table 14

10.1.15 RS232 Interface connections

Pin	Meaning
2	TXD
3	RXD
5	Ground
6	+5V
1, 4, 7, 8, 9	Not connected

Table 15

11. DIAGRAMS AND LAYOUTS

The following pages include the wiring diagrams and assembly layouts of:

- Main card;
- Audio Input card;
- Power supply unit card.

© Copyright 1999
First Edition – April ’99
Created by Ing. Dario Vignani.

R.V.R. Elettronica S.r.l.
via del Fonditore, 2/2c – 40138 Bologna (Italy)
Telefono: 051 6010506 (4 l.r.a) – Fax: 051 6011104
International Phone: +39 051 6010506 – Fax: +39 051 6011104

Tutti i diritti sono riservati.
Stampato in Italia.
Nessuna parte di questo manuale può essere riprodotta, memorizzata in sistemi di archivio, o trasmessa in qualsiasi forma o mezzo elettronico, meccanico, fotocopia, registrazione o altri senza la preventiva autorizzazione scritta dell’editore.

Printed and bound in Italy.
All right reserved.
No part of this manual may be reproduced or utilized in any form or by any means electronic or mechanical, including photocopying, recording or by any information storage and retrieval system without permission in writing from the publisher.

Appendix A Piani di montaggio, schemi elettrici, liste componenti / *Component layouts, schematics, bills of material*

Questa parte del manuale contiene i dettagli tecnici riguardanti la costruzione delle singole schede componenti il DTX2/DTX4. L'appendice è composta dalle seguenti sezioni.

This part of the manual contains the technical details about the different boards of the DTX2/DX4. This appendix is composed of the following sections:

Description	RVR Code	Vers.	Pages
Wiring diagram	/	1.0	2
Power supply card	CSSWPSUP0003	1.0	4
Pannel card	SLPANDIG0002	1.0	4
Digital Decoder Main board	SLMOD512K002	1.0	6
Audio Output Card	SLINPAPTX002/SLSC8DIL8	1.0	4

Pagina lasciata intenzionalmente in bianco
This page intentionally left blank

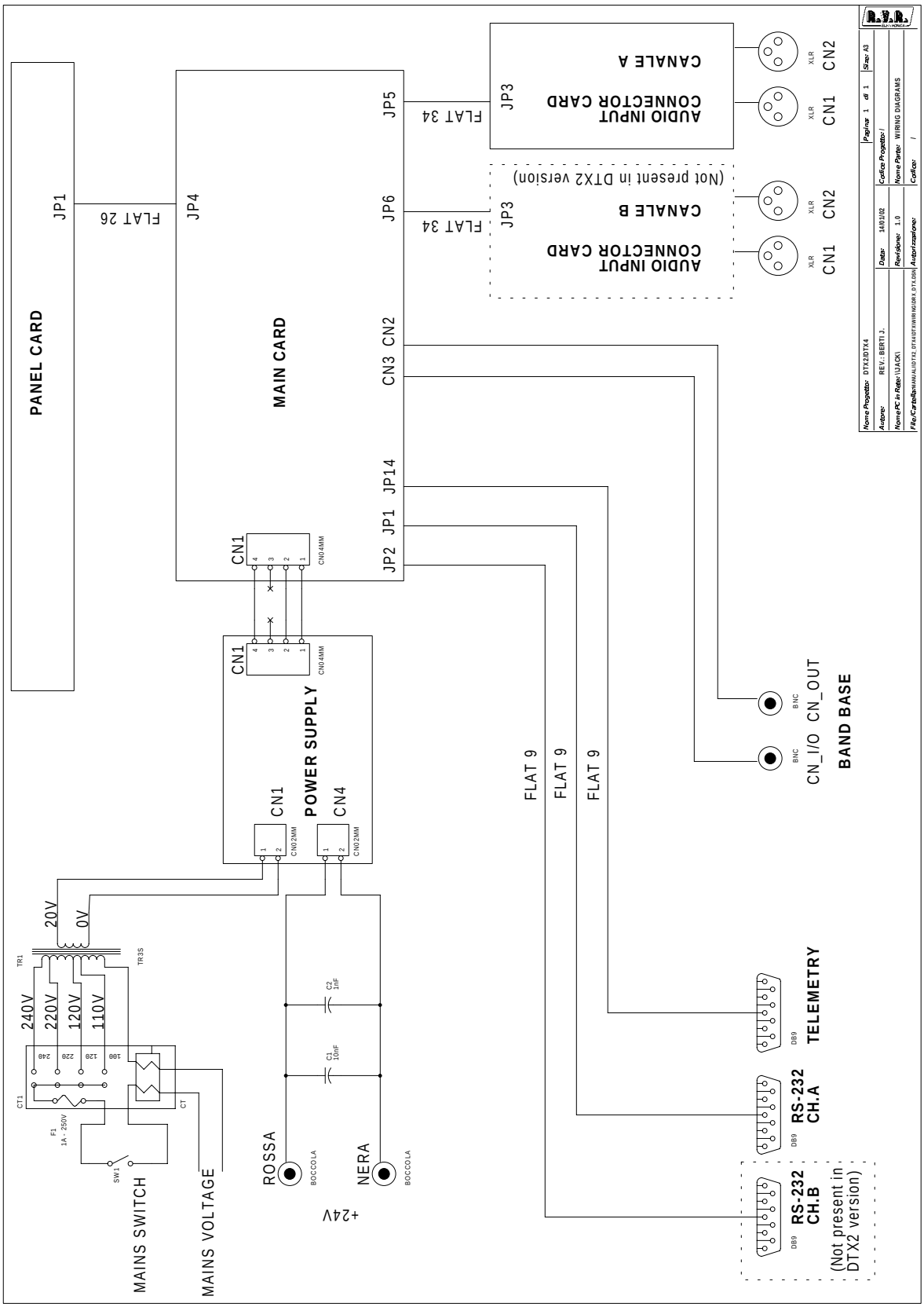
PANEL CARD
JP1
FLAT 26
MAIN CARD
JP4
JP5
JP6
CN3 CN2
JP14
JP1
JP2
FLAT 34
FLAT 34
JP3
AUDIO INPUT CONNECTOR CARD
CANALE A
CANALE B
(Not present in DTX2 version)
CN1
CN2
XLR
CN1
CN2
CN1
CN1
CN04MM
POWER SUPPLY
CN1
CN4
CN02MM
CN02MM
FLAT 9
FLAT 9
FLAT 9
BNC
CN_I/O CN_OUT
BAND BASE
20V
0V
TR1
TR3S
240V
220V
120V
110V
CT1
CT
F1
1A - 250V
SW1
MAINS SWITCH
MAINS VOLTAGE
C2
1nF
C1
10nF
ROSSA
NERA
BOCCOLA
+24V
DB9
TELEMETRY
RS-232
CH.A
RS-232
CH.B
(Not present in DTX2 version)
Nome Progetto: DTX2/DTX4
Autore: REV.: BERTI J.
Data: 14/01/02
Nome PC in Rete: \\JACK\
Revisione: 1.0
Pagina: 1 di 1
Size: A3
Codice Progetto: /
Nome Parte: WIRING DIAGRAMS
Codice: /

Pagina lasciata intenzionalmente in bianco
This page was intentionally left blank

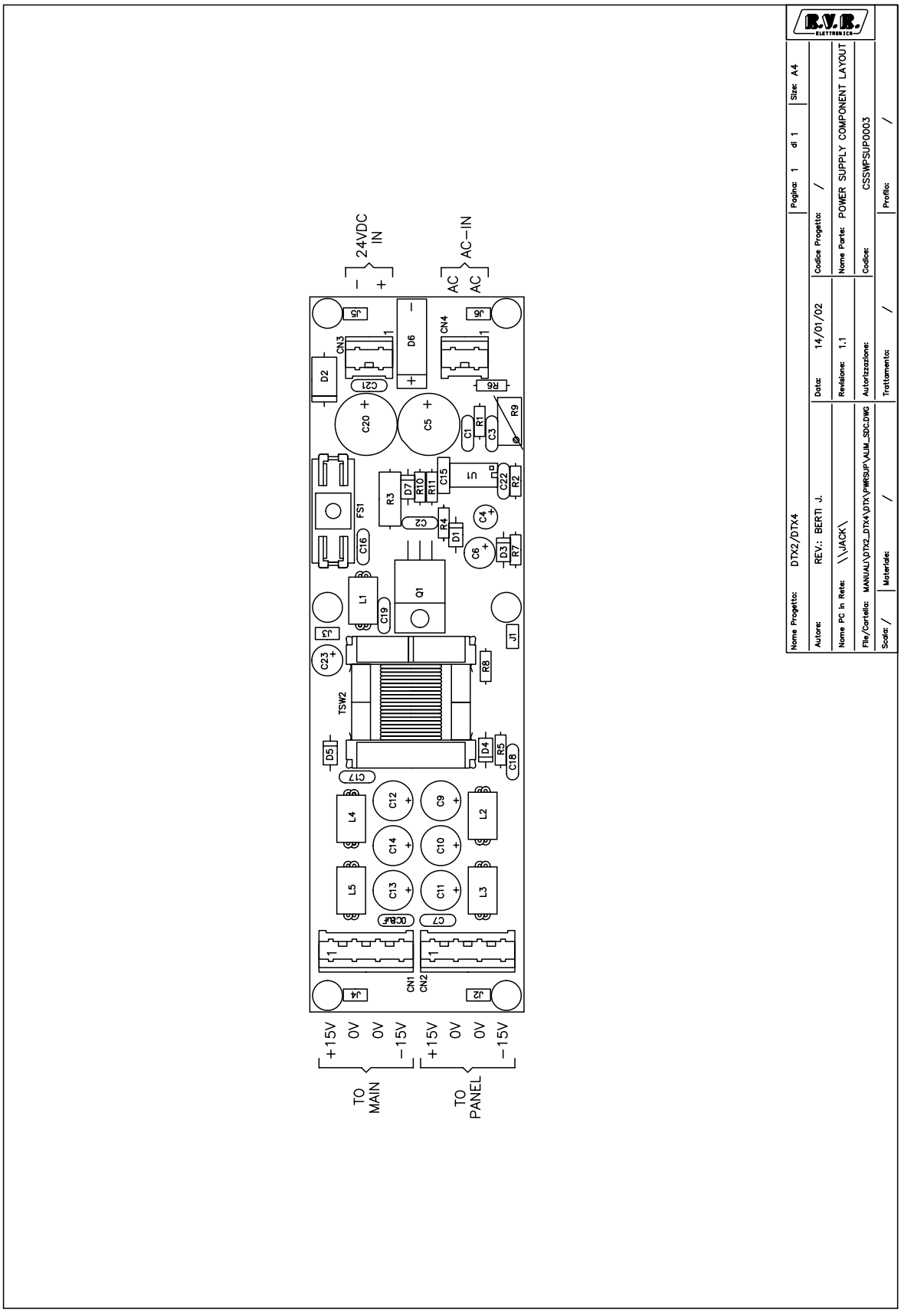
24VDC IN
AC–IN
AC
AC
+15V
0V
0V
–15V
+15V
0V
0V
–15V
TO MAIN
TO PANEL
CN1
CN2
CN3
CN4
FS1
TSW2
Q1
U1
J1
J2
J3
J4
J5
J6
Nome Progetto: DTX2/DTX4
Pagina: 1 di 1
Size: A4
Autore: REV.: BERTI J.
Data: 14/01/02
Codice Progetto: /
Nome PC in Rete: \\JACK\
Revisione: 1.1
Nome Parte: POWER SUPPLY COMPONENT LAYOUT
File/Cartella: MANUALI\DTX2_DTX4\DTX\PWRSUP\ALIM_SDC.DWG
Autorizzazione:
Codice: CSSWPSUP0003
Scala: /
Materiale: /
Trattamento: /
Profilo: /

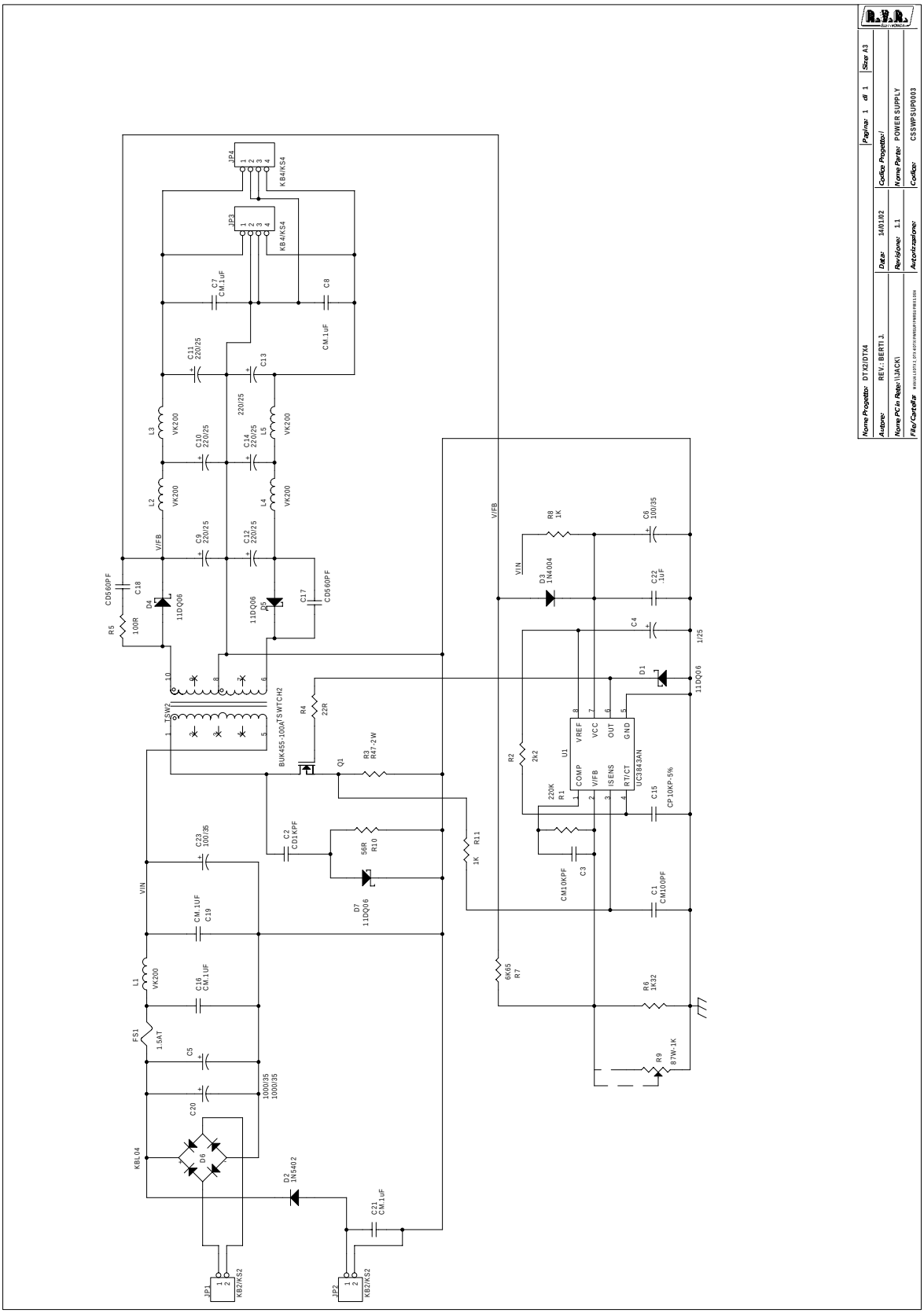
Nome Progetto: DTX2/DTX4
Autore: REV. BERTI A.
Nome PC in Rete: \\JACK\
File/Cartella:
Data: 14/01/02
Revisione: 1.1
Autorizzazione:
Pagina: 1 di 1
Size A3
Codice Progetto:
Nome Parte: POWER SUPPLY
Codice: CSSWPSUP003
JP4
KB4/KS4
JP3
KB4/KS4
C7 CM.1UF
C8 CM.1uF
C11 220/25
C13 220/25
L3 VK200
C10 220/25
C14 220/25
L5 VK200
L2 VK200
C9 220/25
C12 220/25
L4 VK200
V/FB
R5 100R
C18 CD560PF
D4 11DQ06
D5 11DQ06
C17 CD560PF
TSW2
BUK455-100A
TSWTCH2
R4 22R
Q1
R3 R47-2W
C2 CD1KPF
56R R10
D7 11DQ06
R11 1K
C23 100/35
V/IN
CM.1UF C19
L1 VK200
C16 CM.1UF
FS1 1.5AT
C5
100/35
100/35
C20
KBL04
D6
D2 1N5402
C21 CM.1uF
JP1 KB2/KS2
JP2 KB2/KS2
V/FB
R8 1K
C6 100/35
V/IN
D3 1N4004
C22 .1uF
C4 1/25
D1 11DQ06
R2 2k2
U1 UC3843AN
VREF VCC OUT GND
COMP V/FB ISENS RT/CT
220K R1
C15 CP.10KP-5%
CM10KPF C3
C1 CM10PF
R7 6K65
R6 1K32
R9 87W-1K

CSSWPSUP0003 Bill Of Materials Page1

Item	Q.ty	Reference	Part
1	2	CN1,CN2	KB2/KS2
2	2	CN3,CN4	KB4/KS4
3	1	C1	CM100PF
4	1	C2	CD1KPF
5	1	C3	CM10KPF
6	1	C4	1/25
7	2	C5,C20	1000/35
8	2	C6,C23	100/35
9	5	C7,C8,C16,C19,C21	CM.1uF
10	6	C9,C10,C11,C12,C13,C14	220/25
11	1	C15	CP10KP-5%
12	2	C18,C17	CD560PF
13	1	C22	.1uF
14	4	D1,D4,D5,D7	11DQ06
15	1	D2	1N5402
16	1	D3	1N4004
17	1	D6	KBL04
18	1	FS1	1.5AT
19	5	L1,L2,L3,L4,L5	VK200
20	1	Q1	BUK455-100A
21	1	R1	220K
22	1	R2	2k2
23	1	R3	R47-2W
24	1	R4	22R
25	1	R5	100R
26	1	R6	1K32
27	1	R7	6K65
28	2	R11,R8	1K
29	1	R9	87W-1K
30	1	R10	56R
31	1	TSW2	TSWTCH2
32	1	U1	UC3843AN

Pagina lasciata intenzionalmente in bianco
This page was intentionally left blank

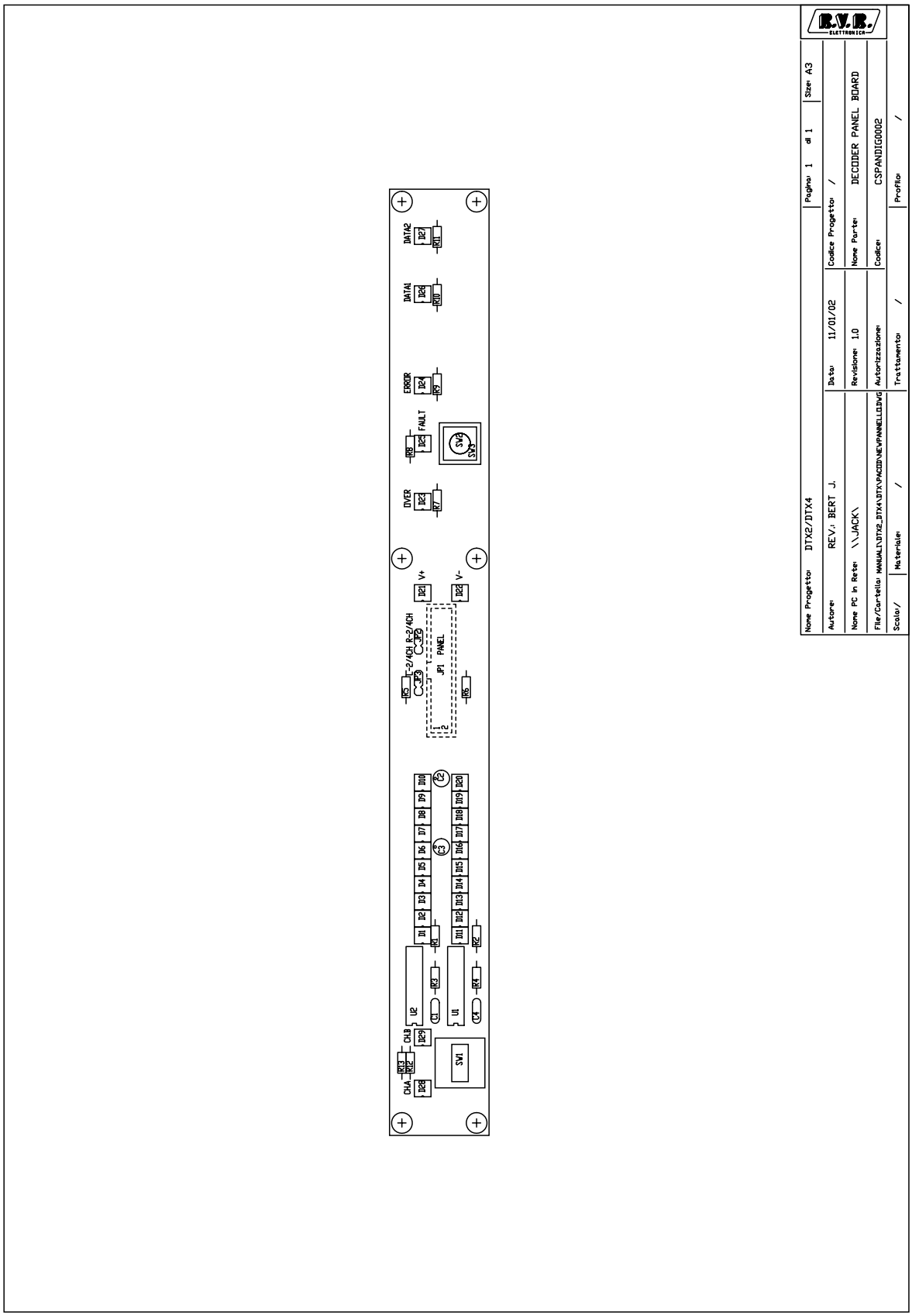

Nome Progetto: DTX2/DTX4		Pagina: 1 di 1	Size: A3
Autore: REV.: BERT J.	Data: 11/01/02	Codice Progetto: /	
Nome PC in Rete: \\JACK\	Revisione: 1.0	Nome Particolare: DECODER PANEL BOARD	
File/Cartella: MANUALI\DTX2_DTX4\DTX\PACDIN\NEWPANNELLO.DWG	Autorizzazione:	Codice: CSPANDIG0002	
Scala: /	Materiale: /	Trattamento: /	Profilo: /

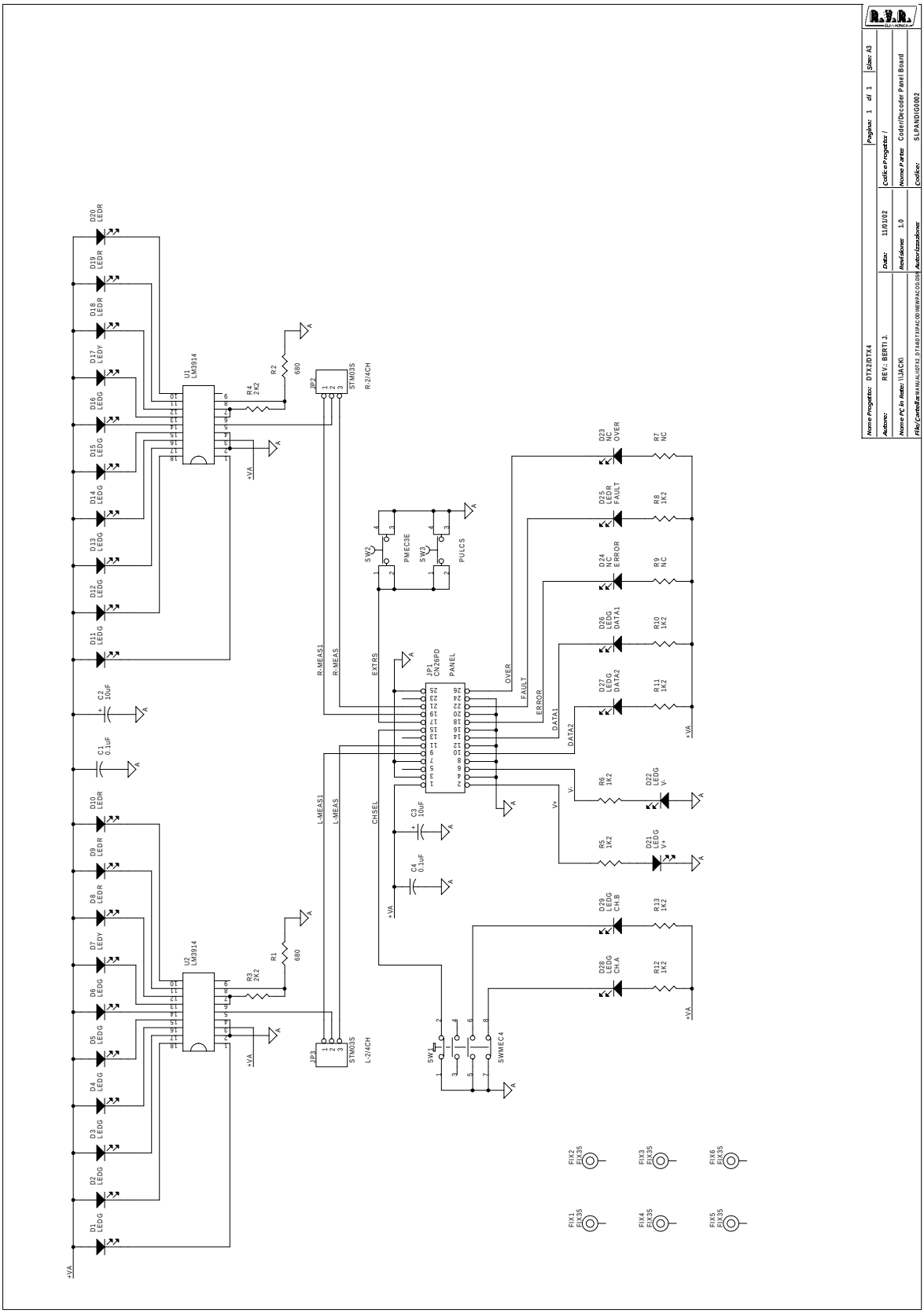
Nome Progetto: DTX2/DTX4
Autore: REV.: BERTI J.
Nome PC in Rete: \\JACK\
Data: 11/01/02
Revisione: 1.0
Autorizzazione:
Codice Progetto: /
Nome Parte: Coder/Decoder Panel Board
Codice: SLPANDIG0002
Pagina: 1 di 1
Size: A3
U1 LM3914
U2 LM3914
JP1 CN26PD PANEL
JP2 STM03S R-2/4CH
JP3 STM03S L-2/4CH
SW1 SWMEC4
SW2 PMEC3E
SW3 PULCS
R-MEAS1
R-MEAS
EXTRS
L-MEAS1
L-MEAS
CHSEL
OVER
FAULT
ERROR
DATA1
DATA2
V-
V+
+VA
FIX1 FIX35
FIX2 FIX35
FIX3 FIX35
FIX4 FIX35
FIX5 FIX35
FIX6 FIX35

SLPANDIG0002 Bill Of Materials Page1

Item	Q.ty	Reference	Part
1	2	C4,C1	0.1uF
2	2	C3,C2	10uF
3	18	D1,D2,D3,D4,D5,D6,D11, D12,D13,D14,D15,D16,D21, D22,D26,D27,D28,D29	LEDG
4	2	D17,D7	LEDY
5	7	D8,D9,D10,D18,D19,D20, D25	LEDR
6	4	R7,R9,D23,D24	NC
7	6	FIX1,FIX2,FIX3,FIX4,FIX5, FIX6	FIX35
8	1	JP1	CN26PD
9	2	JP2,JP3	STM03S
10	2	R1,R2	680
11	2	R3,R4	2K2
12	7	R5,R6,R8,R10,R11,R12,R13	1K2
13	1	SW1	SWMEC4
14	1	SW2	PMEC3E
15	1	SW3	PULCS
16	2	U2,U1	LM3914

Pagina lasciata intenzionalmente in bianco
This page was intentionally left blank

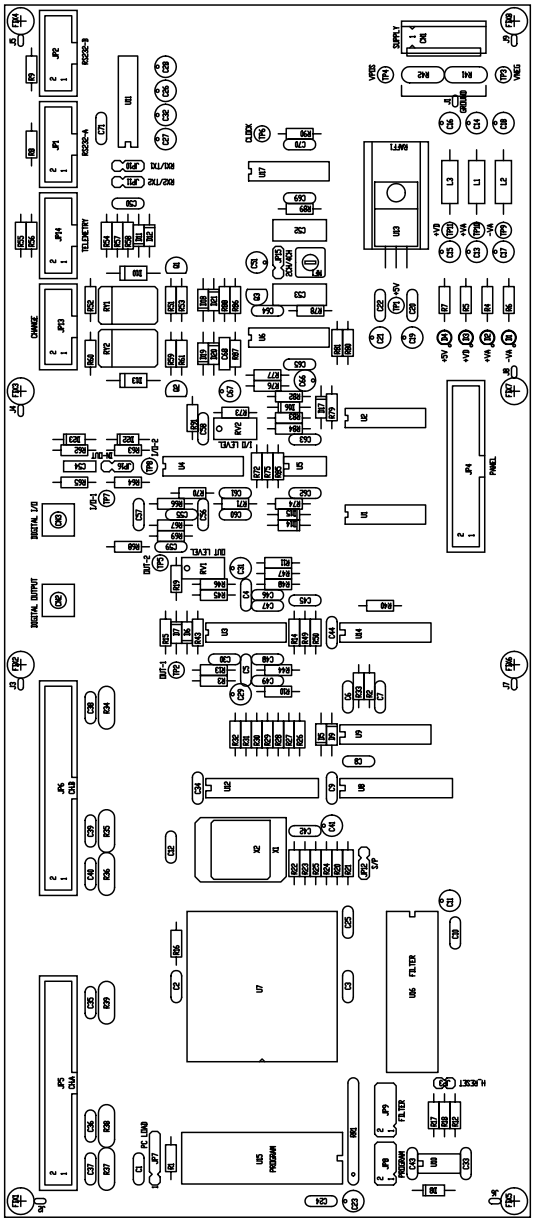

Nome Progetto: DTX2/DTX4		Pagina: 1 di 1	Size: A3
Autore: BERTI J.	Data: 11/01/02	Codice Progetto: /	
Nome PC in Rete: REV: BERTI J.	Revisione: 1.0	Nome Parte: DIGITAL CODER/DECODER MAIN BOARD	
File/Cartella: MANUALI\DTX2_DTX4\DTX\CODER\NEW\CODEC.DWG	Autorizzazione:	Codice: CSMOD512K002	
Scala: / Materiale: /	Trattamento: /	Profilo: /	

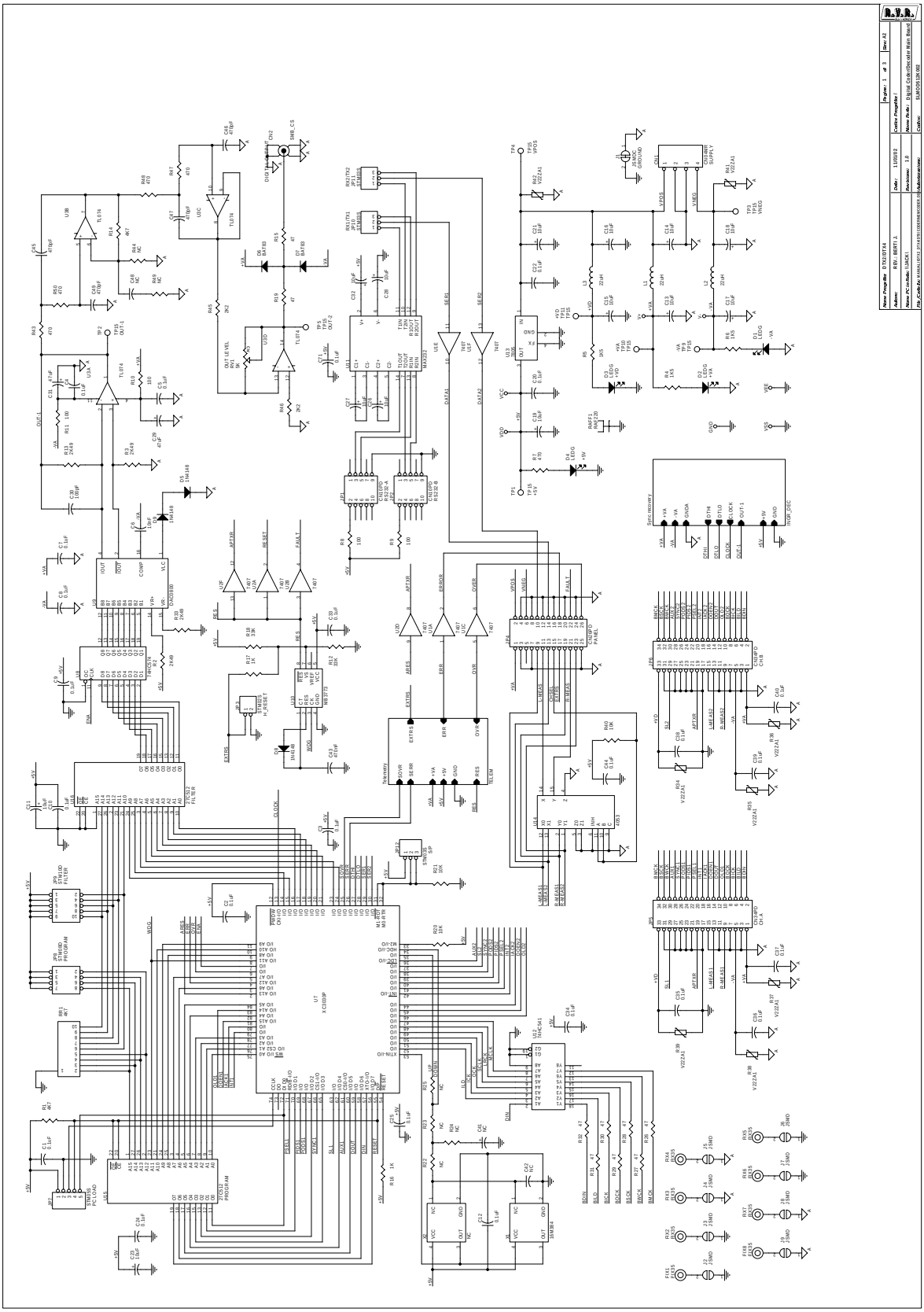

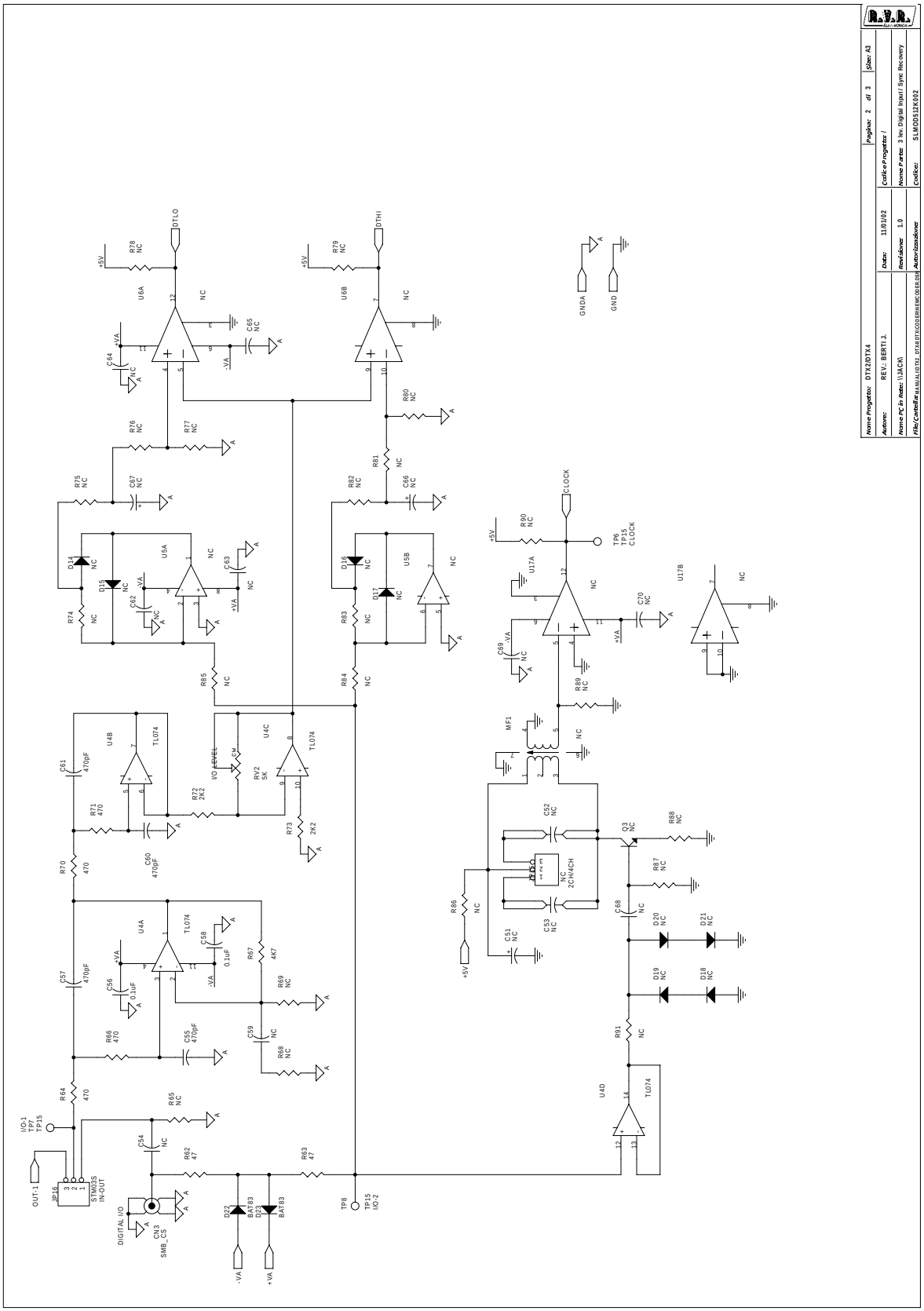
Nome Progetto: DTX2/DTX4
Autore: REV.: BERTI J.
Data: 11/01/02
Codice Progetto: /
Nome PC in Rete: \\JACK\
Revisione: 1.0
Nome Parte: 3 lev. Digital Input / Sync Recovery
Codice: SLMOD512K002
Pagina: 2 di 3
Size: A3
DTLO
DTHI
CLOCK
GNDA
GND
U6A
U6B
U5A
U5B
U17A
U17B
U4A
U4B
U4C
U4D
TL074
MF1
RV2 5K
I/O LEVEL
2CH/4CH
STM03S IN-OUT
DIGITAL I/O
CN3 SMB_CS
BAT83
TP8
TP15 I/O-2
TP6 TP15 CLOCK
OUT-1
I/O-1 TP7 TP15
-VA
+VA
+5V

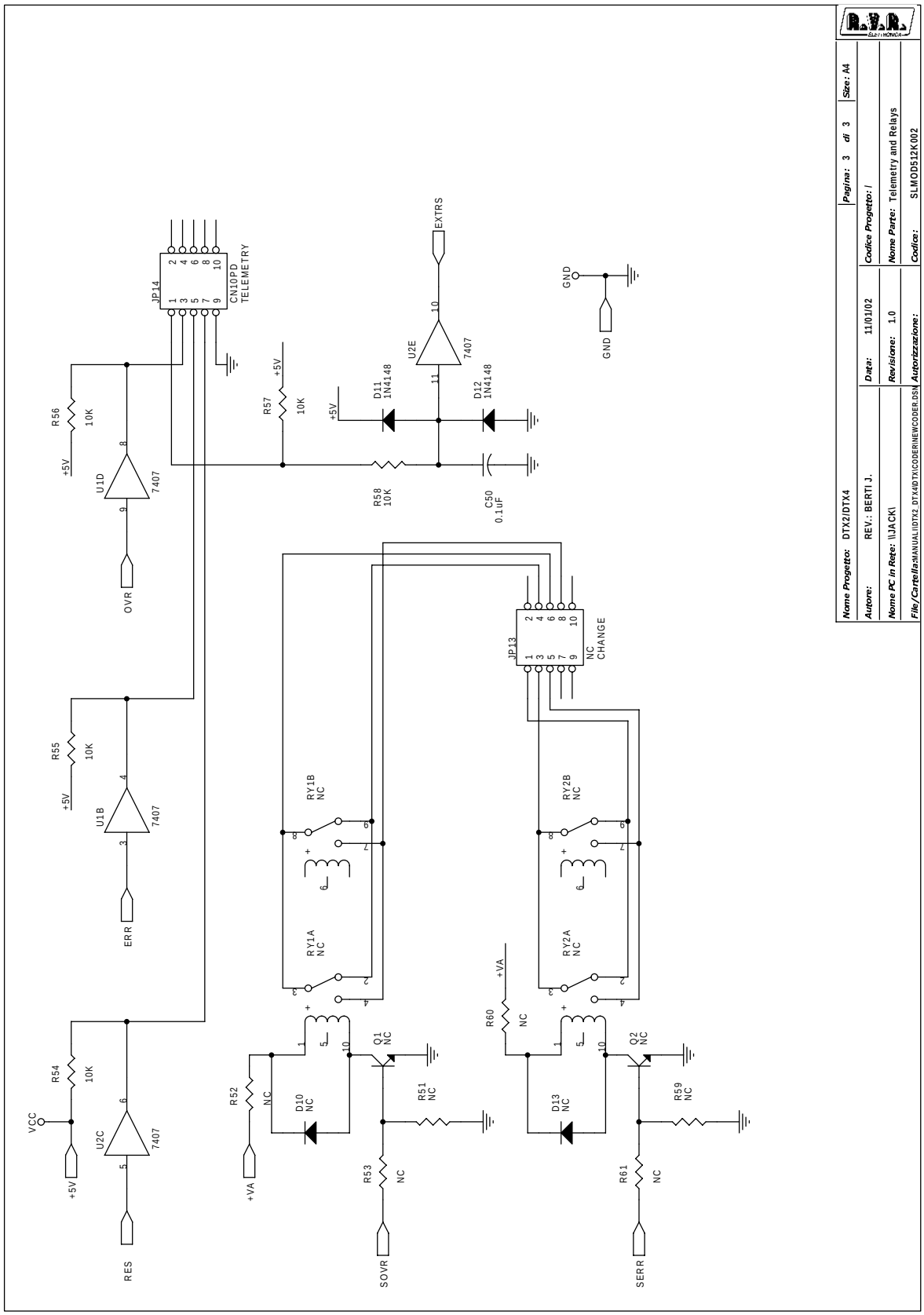
JP14
CN10PD
TELEMETRY
EXTRS
GND
R56
10K
+5V
U1D
7407
OVR
R57
10K
+5V
D11
1N4148
U2E
7407
D12
1N4148
R58
10K
C50
0.10uF
JP13
NC
CHANGE
R55
10K
U1B
7407
ERR
RY1B
NC
RY2B
NC
RY1A
NC
RY2A
NC
+VA
R60
NC
Q1
NC
Q2
NC
R54
10K
VCC
U2C
7407
RES
R52
NC
D10
NC
R51
NC
D13
NC
R59
NC
R53
NC
SOVR
R61
NC
SERR
Nome Progetto: DTX2/DTX4
Autore: REV.: BERTI J.
Nome PC in Rete: \\JACK\
File/Cartella: MANUALI\DTX2_DTX4\DTXCODER\NEWCODER.DSN
Pagina: 3 di 3
Size: A4
Data: 11/01/02
Revisione: 1.0
Autorizzazione:
Codice Progetto: /
Nome Parte: Telemetry and Relays
Codice: SLMOD512K002

SLMOD512K002 Bill Of Materials Page1

Item	Q.ty	Reference	Part
1	1	CN1	CN04MR
2	2	CN3,CN2	SMB_CS
3	27	C1,C2,C3,C4,C5,C7,C8,C9, C10,C12,C20,C22,C24,C25, C33,C34,C35,C36,C37,C38, C39,C40,C44,C50,C56,C58, C71	0.1uF
4	1	C6	10nF
5	14	C11,C13,C14,C15,C16,C17, C18,C19,C21,C23,C26,C27, C28,C32	10uF
6	2	C31,C29	47uF
7	1	C30	100pF
8	72	RY1,Q1,MF1,X2,RY2,Q2,Q3, U5,U6,D10,JP13,D13,D14, JP15,D15,D16,U17,D17,D18, D19,D20,D21,R22,R23,R24, R25,C41,C42,R44,C48,R49, R51,C51,R52,C52,R53,C53, C54,R59,C59,R60,R61,C62, C63,C64,R65,C65,C66,C67, R68,C68,R69,C69,C70,R74, R75,R76,R77,R78,R79,R80, R81,R82,R83,R84,R85,R86, R87,R88,R89,R90,R91	NC
9	1	C43	470nF
10	8	C45,C46,C47,C49,C55,C57, C60,C61	470pF
11	4	D1,D2,D3,D4	LEDG
12	5	D5,D8,D9,D11,D12	1N4148
13	4	D6,D7,D22,D23	BAT83
14	8	FIX1,FIX2,FIX3,FIX4,FIX5, FIX6,FIX7,FIX8	FIX35
15	3	JP1,JP2,JP14	CN10PD
16	1	JP3	STM02S
17	1	JP4	CN26PD
18	2	JP5,JP6	CN34PD
19	1	JP7	STM05S
20	1	JP8	STM08D
21	1	JP9	STM10D
22	4	JP10,JP11,JP12,JP16	STM03S
23	1	J1	JSMDC
24	8	J2,J3,J4,J5,J6,J7,J8,J9	JSMD
25	3	L1,L2,L3	22uH
26	1	RAFF1	RAF220
27	4	RR1,R1,R14,R67	4K7
28	2	RV2,RV1	5K
29	4	R2,R3,R13,R33	2K49
30	3	R4,R5,R6	1K5
31	9	R7,R43,R47,R48,R50,R64, R66,R70,R71	470
32	4	R8,R9,R10,R11	100
33	2	R18,R12	33K
34	11	R15,R19,R26,R27,R28,R29,	47

		R30,R31,R32,R62,R63	
35	2	R16,R17	1K
36	8	R20,R21,R40,R54,R55,R56, R57,R58	10K
37	8	R34,R35,R36,R37,R38,R39, R41,R42	V22ZA1
38	4	R45,R46,R72,R73	2K2
39	11	TP1,TP2,TP3,TP4,TP5,TP6, TP7,TP8,TP9,TP10,TP11	TP15
40	2	U1,U2	7407
41	2	U4,U3	TL074
42	1	U7	XC3030P
43	1	U8	74HC574
44	1	U9	DAC0800
45	1	U10	MB3773
46	1	U11	MAX232
47	1	U12	74HC541
48	1	U13	7805
49	1	U14	4053
50	2	U16,U15	27C512
51	1	X1	16M384

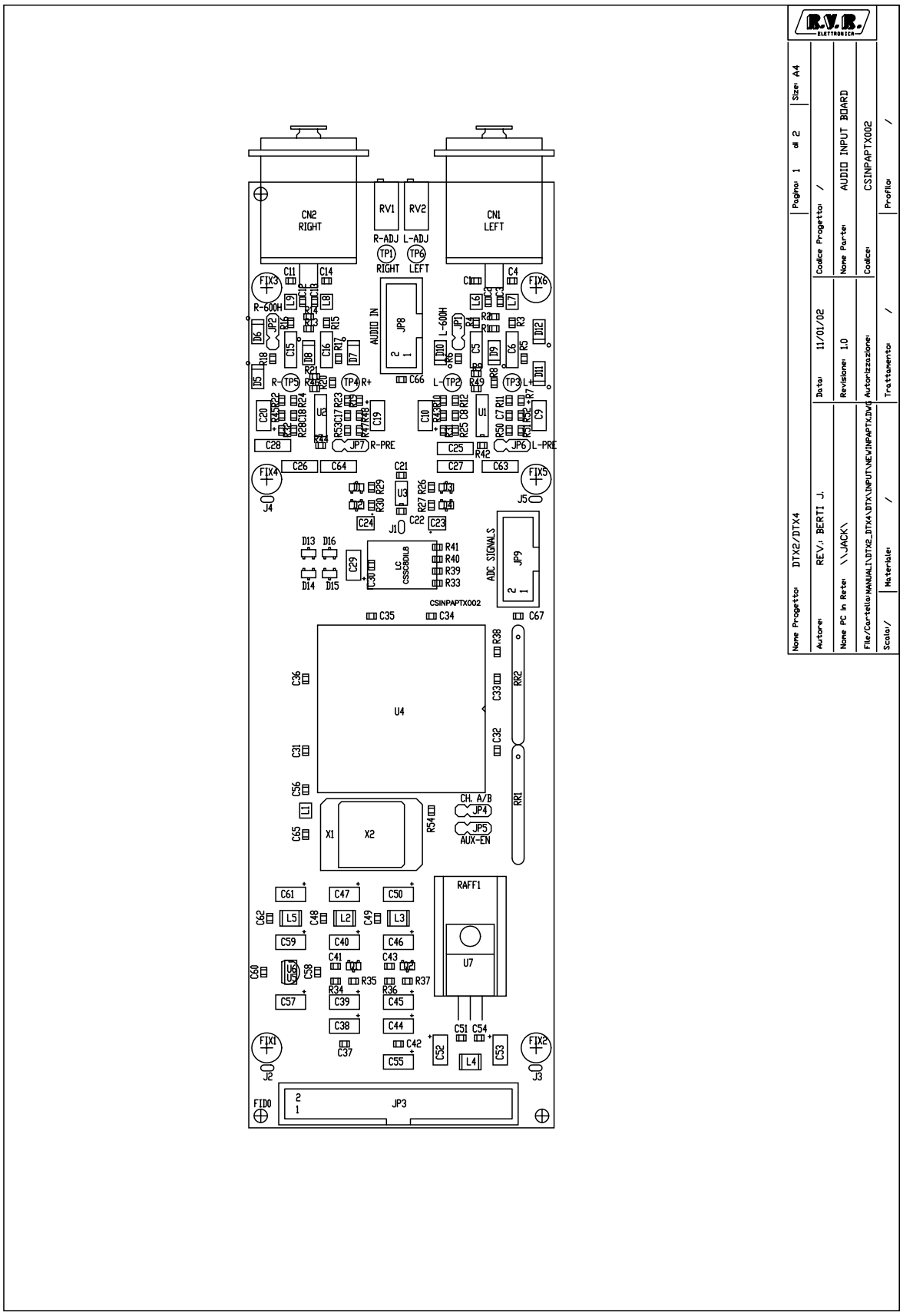
CN2
RIGHT
CN1
LEFT
RV1
RV2
R-ADJ
L-ADJ
TP1
TP6
RIGHT
LEFT
AUDIO IN
JP8
R-600H
L-600H
R-PRE
L-PRE
U2
U1
U3
J1
J4
J5
ADC SIGNALS
JP9
LC
CSSC8DIL8
CSINPAPTX002
U4
X1
X2
CH. A/B
JP4
JP5
AUX-EN
RR1
RR2
RAFF1
U7
FIX1
FIX2
FIX3
FIX4
FIX5
FIX6
J2
J3
FID0
JP3
Nome Progetto: DTX2/DTX4
Autore: REV.: BERTI J.
Nome PC in Rete: \\JACK\
File/Cartella: MANUALI\DTX2_DTX4\DTX\INPUT\NEWINPAPTX.DWG
Scala: /
Materiale: /
Data: 11/01/02
Revisione: 1.0
Autorizzazione:
Trattamento: /
Codice Progetto: /
Nome Parte: AUDIO INPUT BOARD
Codice: CSINPAPTX002
Pagina: 1 di 2
Size: A4
Profilo: /

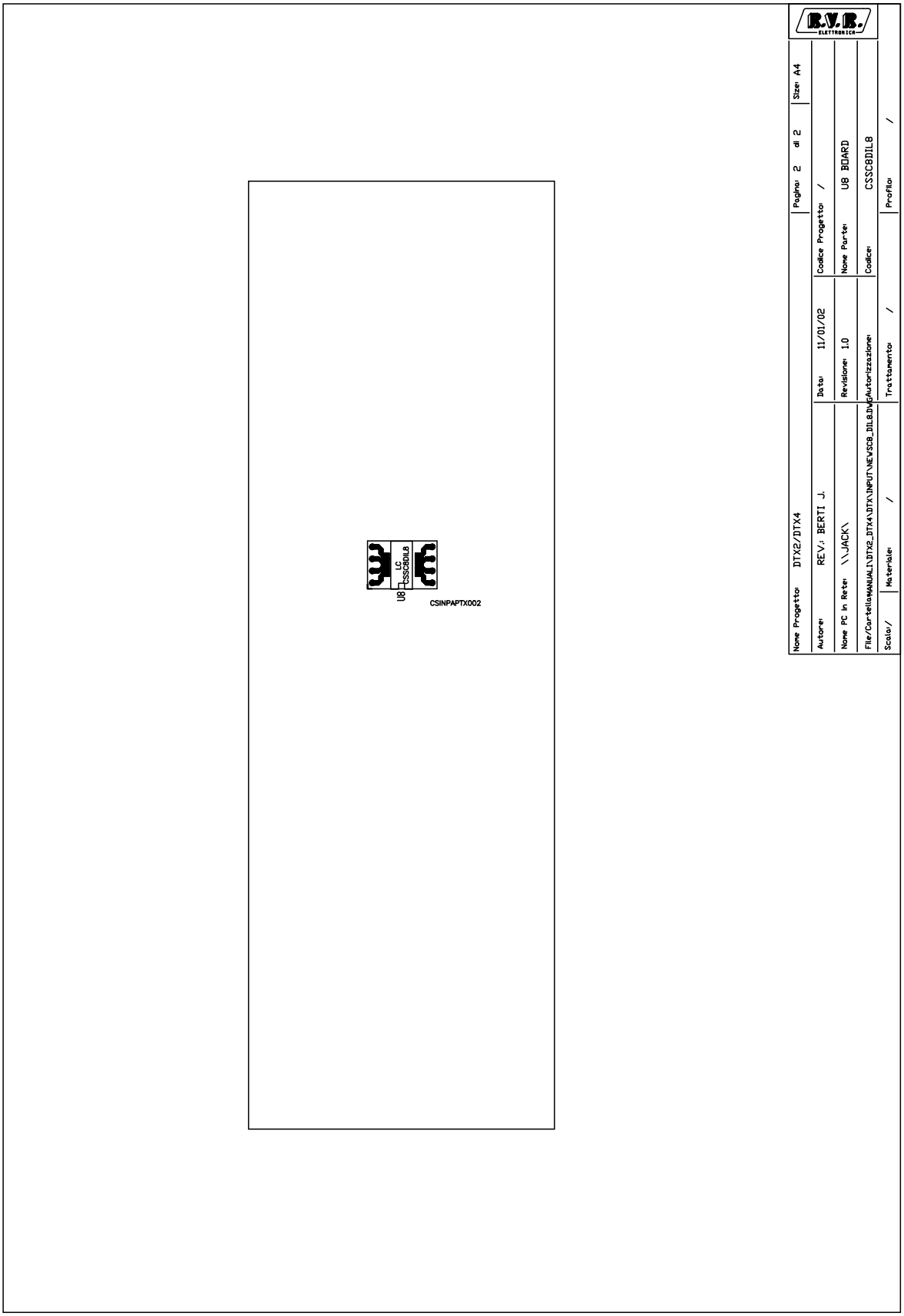
U8
LC
CSSC8DIL8
CSINPAPTX002
R.V.R. ELETTRONICA
Pagina: 2 di 2
Size: A4
Nome Progetto: DTX2/DTX4
Codice Progetto: /
Autore: REV.: BERTI J.
Data: 11/01/02
Nome PC in Rete: \\JACK\
Revisione: 1.0
Nome Parte: U8 BOARD
File/Cartella: MANUALI\DTX2_DTX4\DTX\INPUT\NEVSSC8_DIL8.DWG
Autorizzazione:
Codice: CSSC8DIL8
Scala: /
Materiale: /
Trattamento: /
Profilo: /

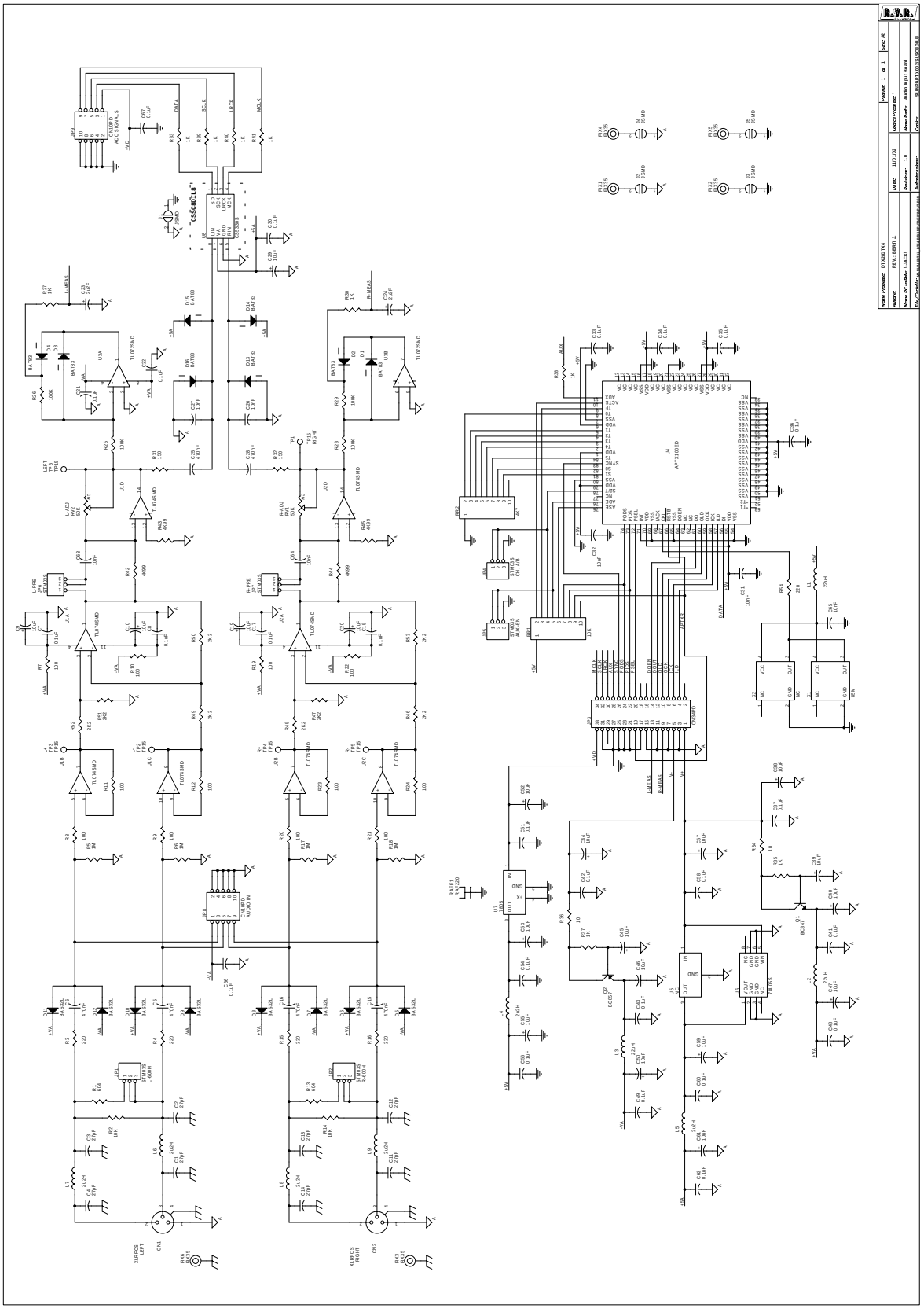

SLINPAPTX002/SLSC8DIL8 Bill Of Materials Page1

Item	Q.ty	Reference	Part
1	2	CN1,CN2	XLRFCS
2	8	C1,C2,C3,C4,C11,C12,C13, C14	27pF
3	6	C5,C6,C15,C16,C25,C28	470nF
4	25	C7,C8,C17,C18,C21,C22, C30,C33,C34,C35,C36,C37, C41,C42,C43,C48,C49,C51, C54,C56,C58,C60,C62,C66, C67	0.1uF
5	19	C9,C10,C19,C20,C29,C38, C39,C40,C44,C45,C46,C47, C50,C52,C53,C55,C57,C59, C61	10uF
6	2	C24,C23	2u2F
7	7	C26,C27,C31,C32,C63,C64, C65	10nF
8	8	D1,D2,D3,D4,D13,D14,D15, D16	BAT83
9	8	D5,D6,D7,D8,D9,D10,D11, D12	BAS32L
10	6	FIX1,FIX2,FIX3,FIX4,FIX5, FIX6	FIX35
11	6	JP1,JP2,JP4,JP5,JP6,JP7	STM03S
12	1	JP3	CN34PD
13	2	JP9,JP8	CN10PD
14	5	J1,J2,J3,J4,J5	JSMD
15	3	L1,L2,L3	22uH
16	6	L4,L5,L6,L7,L8,L9	2u2H
17	1	Q1	BC847
18	1	Q2	BC857
19	1	RAFF1	RAF220
20	3	RR1,R2,R14	10K
21	1	RR2	4K7
22	2	RV2,RV1	50K
23	2	R1,R13	604
24	5	R3,R4,R15,R16,R54	220
25	4	R5,R6,R17,R18	1M
26	12	R7,R8,R9,R10,R11,R12,R19, R20,R21,R22,R23,R24	100
27	4	R25,R26,R28,R29	100K
28	9	R27,R30,R33,R35,R37,R38, R39,R40,R41	1K
29	2	R31,R32	150
30	2	R34,R36	10
31	4	R42,R43,R44,R45	4K99
32	8	R46,R47,R48,R49,R50,R51, R52,R53	2K2
33	6	TP1,TP2,TP3,TP4,TP5,TP6	TP15
34	2	U2,U1	TL074SMD
35	1	U3	TL072SMD
36	1	U4	APTX100ED
37	2	U5,X2	NC
38	1	U6	78L05S
39	1	U7	7805
40	1	U8	CS5330S
41	1	X1	85M

Appendix B Setting Operation of RXRLNV Digital radio Link

Pagina lasciata intenzionalmente in bianco
This page intentionally left blank

R.V.R.Elettronica S.p.a.
Broadcast Equipment

R&D Department
Digital Hardware

via del Fonditore, 2/2c – 40138 Bologna, ITALY – Tel. +39 051 6010506, Fax +39 051 6011104

FM Receiver

Phase equalization

For correct reception of the digital signal, audio section phase equalization must be Off.

With an R.V.R. receiver, move jumper JP5 on the Audio Process Card to position 2-3 (Figure 1).

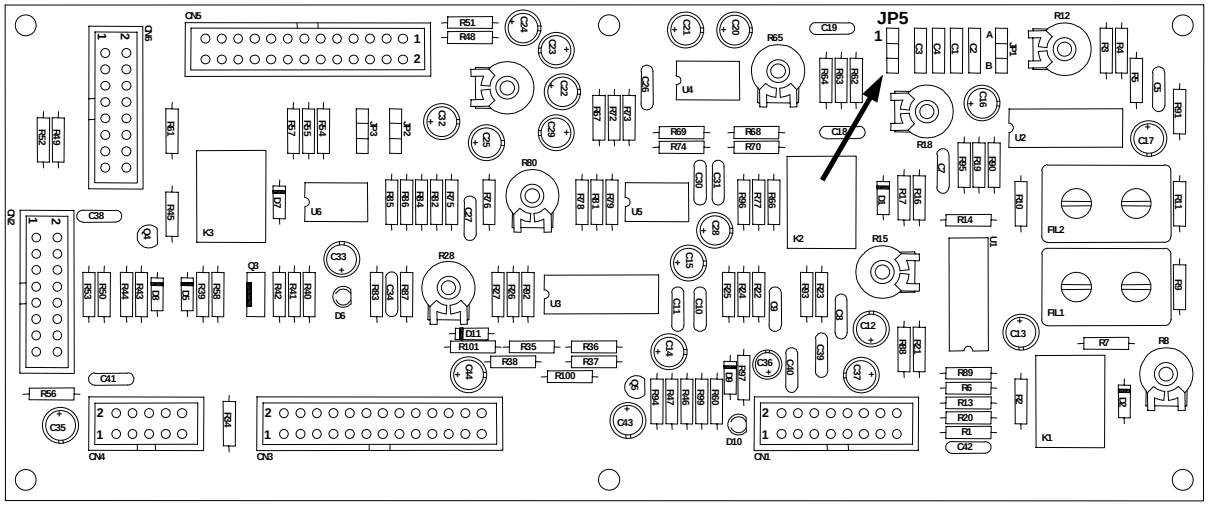

Figure 1

Passband (DRX/4 only)

The DTX/4 – DRX/4 system requires a reception band which is noticeably bigger than that required by the DTX/2 – DRX/2 system.

With an R.V.R. receiver, remove the ceramic filters FC1 and FC2 from the 70 MHz IF Card (Figure 2), substituting them with filters with 470 pF capacity.

Fine tuning

Adjust the tuning coils of the intermediate frequency stage to obtain a signal at the receiver MPX output which is as similar as possible to the signal at the DTX output.
This operation is necessary with a DTX/4 – DRX/4 system, but may not be required when using a DTX/2 – DRX/2 system.

With an R.V.R. receiver, the coils to be adjusted are TR1 and TR2 on the 70 MHz IF Card (Figure 2).

via del Fonditore, 2/2c – 40138 Bologna, ITALY – Tel. +39 051 6010506, Fax +39 051 6011104

File name: Setting Operation of RXRLNV digital radio link.doc

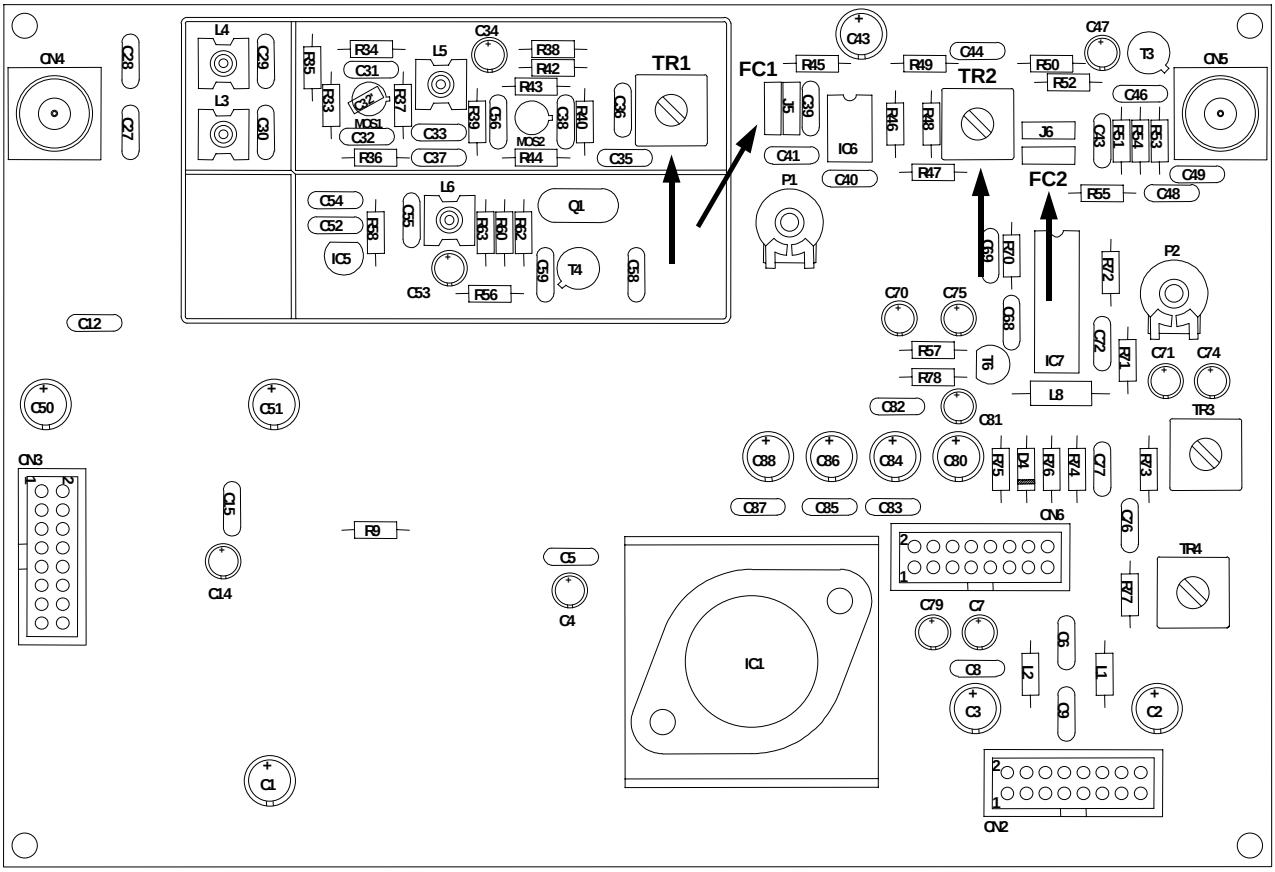

Figure 2

Output level

Adjust the receiver MPX output level so that the amplitude is 2.2 V_{PP}.

Baseband output

Connect the receiver MPX output to the DRX baseband input (I/O).